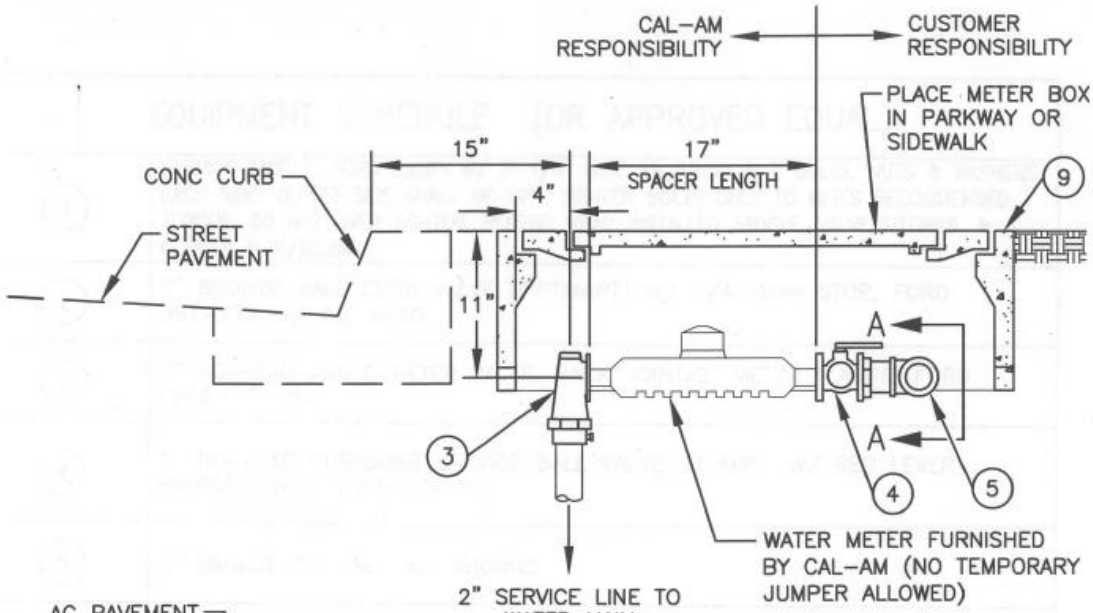

ELEV VIEW

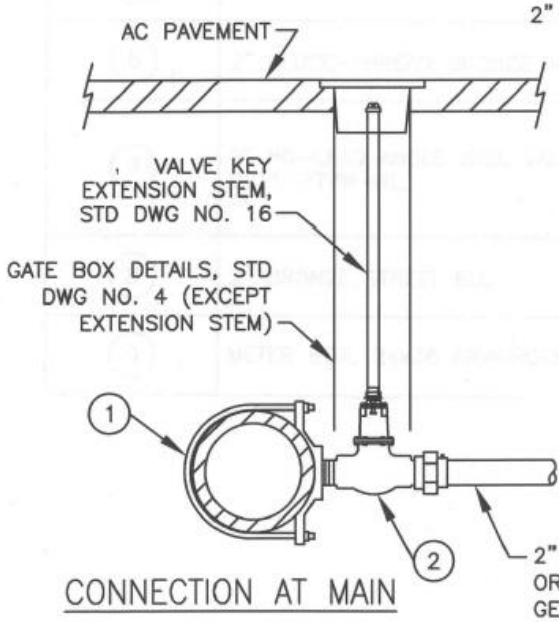

CONNECTION AT MAIN

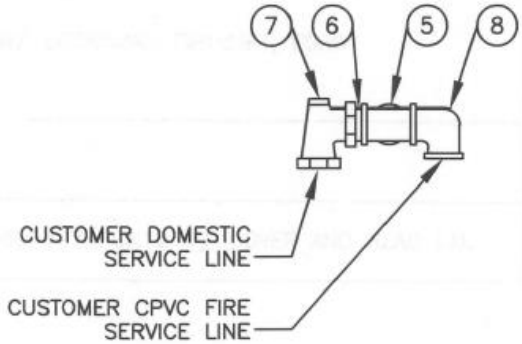

SECTION A-A

NOTES:
1. COPPER MAY BE CONTINUOUS ROLL, SWEAT FITTINGS, OR COMPRESSION FITTINGS. PRESSURE TEST FROM MAIN TO METER.
2. SEE TRENCH REPAIR STD DWG NO. 17.

A REDUCED PRESSURE PRINCIPLE BACKFLOW DEVICE MAY BE NECESSARY CHECK WITH CAL-AM

CALIFORNIA AMERICAN WATER VENTURA COUNTY			2" SERVICE INSTALLATION
REVISIONS	DRAWN BY: DSC	APPROVED BY	
NO.	DATE: 8/22/14	K. Gold	
DATE	SCALE: NONE		STANDARD DRAWING NO. 9-1

EQUIPMENT SCHEDULE (OR APPROVED EQUAL)	
(1)	SERVICE SADDLE, FORD 202BS W/ 3-1/4" WIDE SS STRAP & 2 BOLTS, NUTS & WASHERS EACH SIDE. OUTLET SIDE SHALL BE FIPT. TIGHTEN BOLTS ONLY TO MFR'S RECOMMENDED TORQUE. DO NOT OVER TIGHTEN. PLASTIC WRAP INSTALLED SADDLE, VALVE/FITTINGS, & COPPER PIPE/TUBING.
(2)	2" BRONZE BALL CURB VALVE (FIPTxMIPT) W/ 1/4 TURN STOP, FORD B81-777 W/ TEE HEAD.
(3)	2" NO-LEAD ANGLE METER VALVE, PACK JOINTx2" METER FLANGE, FORD FV43-777-NL.
(4)	2" NO-LEAD CUSTOMER SERVICE BALL VALVE, FLxMIPT, W/ RED LEVER HANDLE, FORD BF83-777-NL.
(5)	2" BRONZE TEE FIPT ALL AROUND.
(6)	2" CLOSE-THREAD BRONZE NIPPLE.
(7)	2" NO-LEAD ANGLE BALL VALVE W/ LOCKWING, FIPTxFIPT, FORD BA11-777W-NL.
(8)	2" BRONZE STREET ELL.
(9)	METER BOX, 24x36 ARMORCAST A6001974PCX12 W/ COVER AND READ LID.

CALIFORNIA AMERICAN WATER
VENTURA COUNTY

REVISIONS								DRAWN BY: DSC	APPROVED BY
NO.								DATE: 8/21/14	
DATE								SCALE: NONE	

2" SERVICE INSTALLATION

STANDARD DRAWING NO. 9-2